# LMUC-100-2

## Digital Lighting Management

### Ultrasonic Ceiling Mount Occupancy Sensor

Quick Start Guide

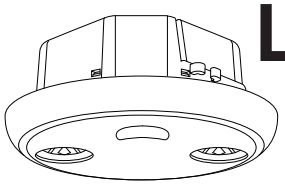

**THIS UNIT IS PRE-SET FOR PLUG n' GO™ OPERATION, ADJUSTMENT IS OPTIONAL.**

**For full operational details, adjustment and more features of the product, see the DLM System Installation Guide supplied with the LMRC-102 and also available at www.wattstopper.com**

**INSTALLATION SHALL BE IN ACCORDANCE WITH ALL APPLICABLE REGULATIONS, LOCAL AND NEC CODES.**

Intended for Listed Class 2 DLM Devices.

For Class 2 DLM devices - To be connected to a Class 2 power source only.

For Class 2 Device Wiring Only – Do Not Reclassify and Install as Class 1, or Power and Lighting Wiring.

Wire connections shall be rated suitable for the wire size (lead and building wiring) employed.

Voltage: ..... 24VDC
Current Consumption: ..... 20mA
Power Supply: ..... Watt Stopper/Legrand Room Controllers
Connection to the DLM Local Network ..... 2 RJ-45 ports
DLM Local Network Characteristics:
- Provides low voltage power over Cat 5e cable (LMRJ).
- Supports up to 24 communicating devices, including 4 LMRC-10x or LMPL-101 max per each DLM Local Network.
- Free topology up to 1,000ft of low voltage cable.

Environment ..... For Indoor Use Only
- Operating Temperature ..... 32° to 131°F (0° to 55°C)
- Storage Temperature ..... 23° to 176°F (-5° to 80°C)
- Relative Humidity ..... 5 to 95% (non condensing)

Patent Pending

## SENSOR PLACEMENT (10' MAX. HEIGHT)

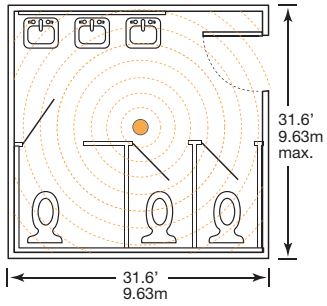


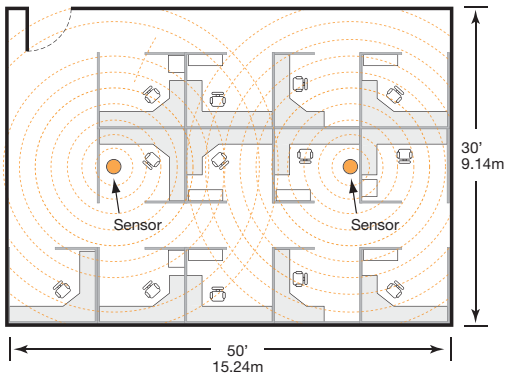


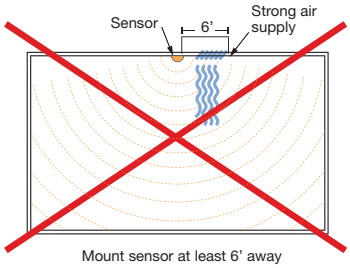


Mount sensor at least 6' away from strong air supply

## COVERAGE PATTERN

The LMUC-100-2 provides a 360° coverage pattern. The coverage shown represents walking motion at a mounting height of 8 to 10 feet.

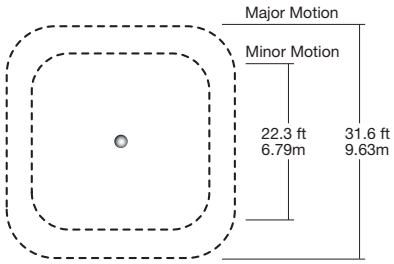


## CONNECTIVITY

The illustrations below show examples of free-topology wiring. The LMUC-100-2 communicates to all other Digital Lighting Management devices connected to the low voltage DLM Local Network, regardless of their position on the DLM Local Network.

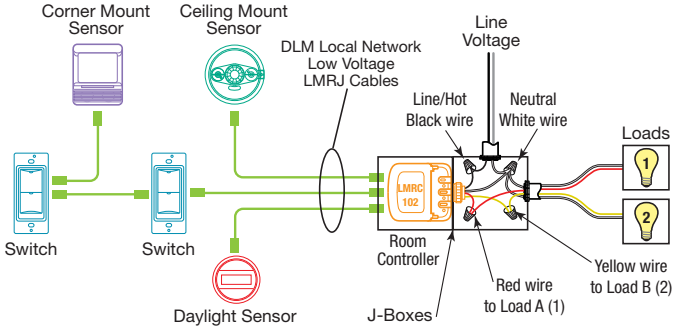


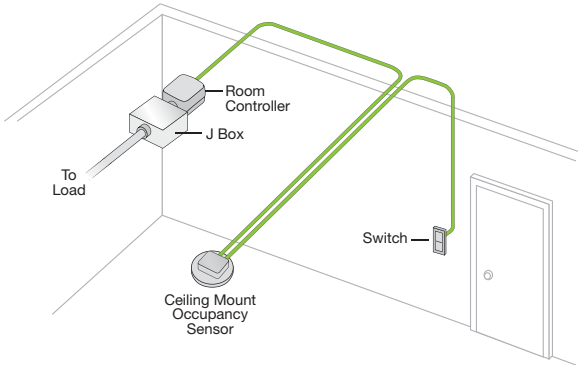

## MOUNTING

**To octagon box:**

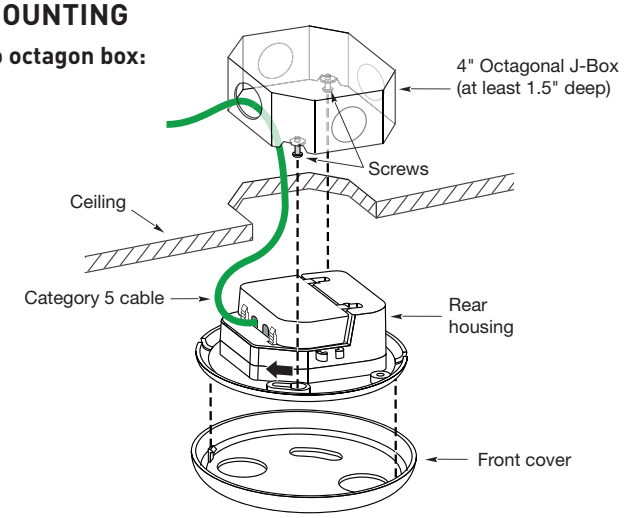


**Through ceiling tile:**

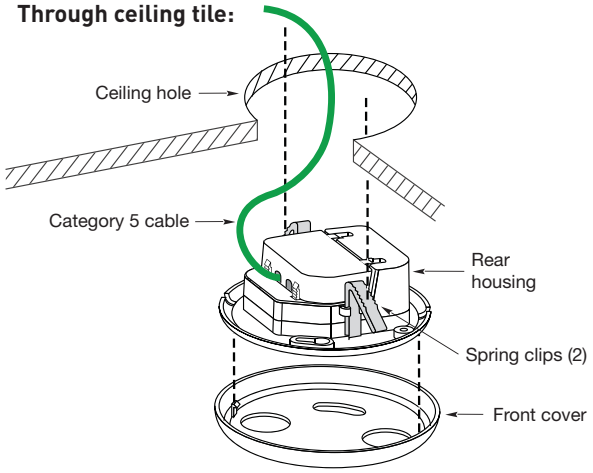


**WARNING:** Do Not Install To Cover a Junction Box Having Class 1, 3 or Power and Lighting Circuits.

## FACTORY PRE-SET OPERATION

### Sensor Parameters

| | | |
|---|---|---|
| **T-DELAY** | Time Delay | 20 minutes |
| US | Ultrasonic Sensitivity | 70% |
| **W-T** | Walk Through | OFF |

### Load Parameters

| | **Load 1** | **Loads 2-8 or more**** | **Plug Load** |
|---|---|---|---|
| ON Mode Operation* | **AUTO-ON** | **MANUAL-ON** if switch is connected. **AUTO-ON** if no switch. | **AUTO-ON** |
| Blink Warning | OFF | OFF | OFF |
| Daylighting | ON | OFF | OFF |

* Auto-OFF is enabled according to the sensor Time Delay when a sensor is bound to the load, regardless of whether the load was turned on automatically with occupancy or manually using a switch.

** Max 8 loads using LMRC-100 series room controllers.

## TROUBLESHOOTING

**WARNING: TO CONNECT A COMPUTER TO THE DLM LOCAL NETWORK USE THE LMCI-100. NEVER CONNECT THE DLM LOCAL NETWORK TO AN ETHERNET PORT – DOING SO MAY DAMAGE COMPUTERS AND OTHER CONNECTED EQUIPMENT.**

### Loads do not operate as expected.

| | |
|---|---|
| **LEDs don't light, display is off** | 1. Check to see that the the sensor is connected to the DLM local Network.<br>2. Check for 24VDC input to the sensor: Plug in a different DLM device at the sensor location. If the device does not power up, 24VDC is not present.<br>• Check the high voltage connections to the room controller.<br>• If high voltage connections are good and high voltage is present, recheck DLM local Network connections between the sensor and the room controller. |
| **The wrong lights are controlled** | 1. Configure the sensor to control the desired lights using the Push n' Learn adjustment procedure. |
| **LEDs turn ON and OFF but load doesn't switch** | 1. Make sure device is not in PnL.<br>2. Check load connections to room controller. |


WattStopper | legrand®
2800 De La Cruz Blvd.
Santa Clara, CA 95050
Phone: 800.879.8585
www.wattstopper.com


6/2009
11438r1

Please Recycle